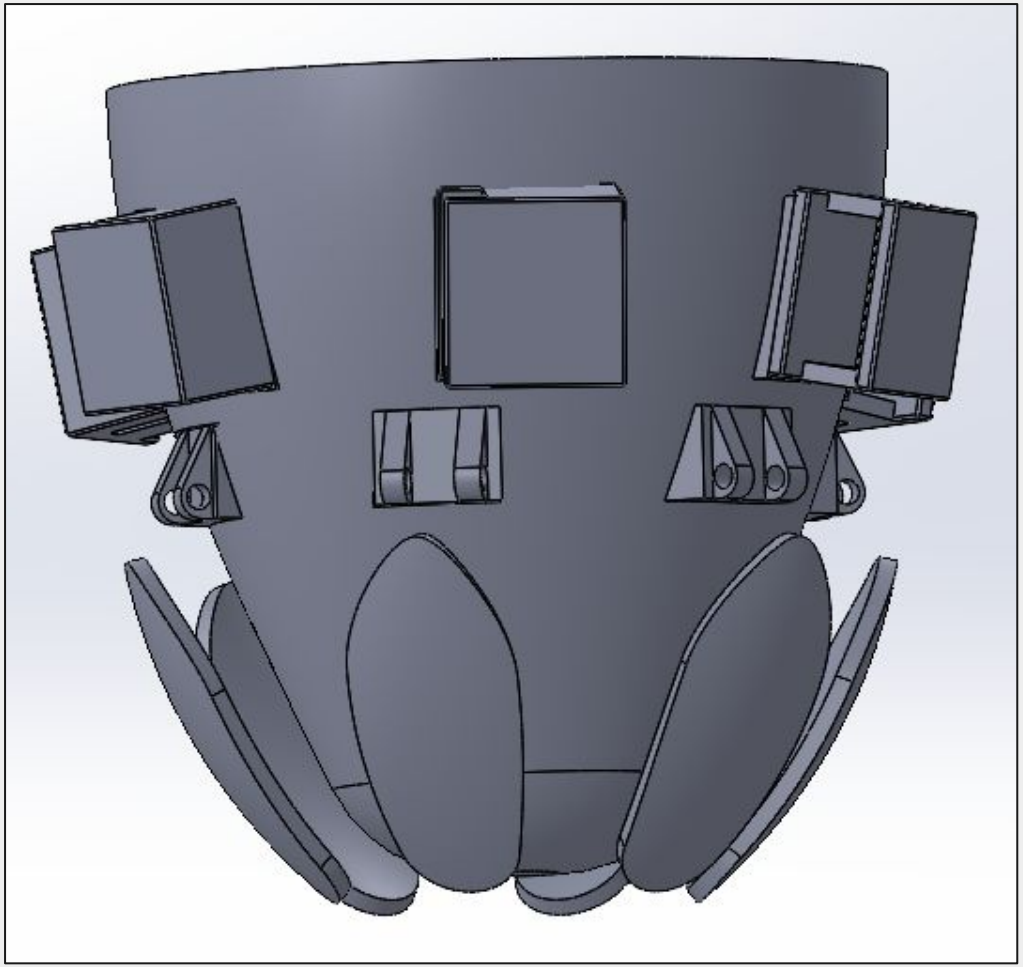

Figure 1: Full Assembly

PROXIFIT SYSTEMS

Madison Voytko
Merci Schneider
Jordan Heffelfinger

Essential Systems Checkoff
BMEN 3030

University of Colorado **Boulder**

TEAM ROLES

Member	Role	Responsibilities
Madison Voytko	Controls Lead	Arduino Programming, Control Logic
Jordan Heffelfinger	Electrical Lead	Circuits, PCB, Power System
Merci Schneider	Mechanical Lead	CAD, Stress Analysis

Table 1: Team Role Breakdown

CLINICAL MOTIVATION

66%

Of prosthetic users experience socket discomfort [1]

Design Goal:

Develop a **bio-responsive prosthetic socket** that detects pressure spikes and automatically adjusts fit.

[1] “Socket Discomfort After Below-Knee Amputation,” *Limber Prosthetics*, May 15, 2025. https://limberprosthetics.com/socket-discomfort-after-below-knee-amputation/ (accessed Mar. 10, 2026).

PROJECT OVERVIEW

- Hybrid adaptive prosthetic socket with a flexible TPU liner and six rigid petals
- TPU interfaces with the user’s limb and distributes pressure
- Embedded Force Sensing Resistors (FSRs) detect localized pressure changes
- Support ring and six-servo actuation system adjust petal compression
- Closed-loop sensing and actuation enables adaptive socket fit

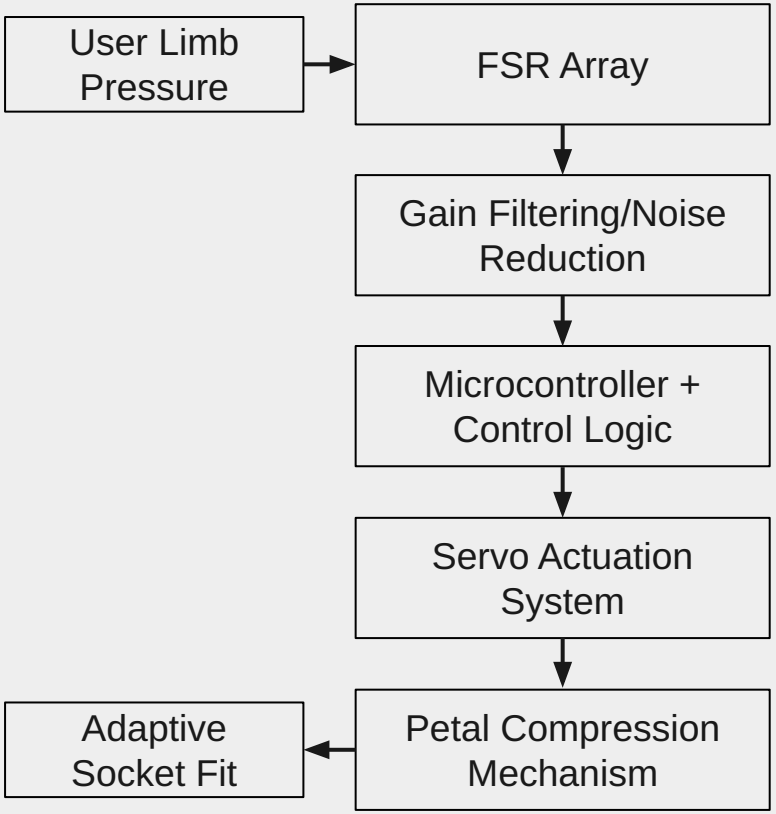

Figure 2: Project Flowchart

DESIGN SCOPE

What We Are Designing:

- TPU Prosthetic Liner Interface
- Rigid Petal Compression Mechanism
- Embedded Force Sensing Resistor (FSR) Array
- Integrated Servo Housings & Kinematic Linkage
- Microcontroller-Based Closed-Loop Control

Leveraging Existing Technologies:

- Off-the-shelf micro-servos
- Arduino-based control platform
- Standard PWM control libraries
- Commercial FSR pressure sensors

Out of Scope:

- Full prosthetic limb integration
- Long-term clinical testing
- Cosmetic covers
- Human subject trials

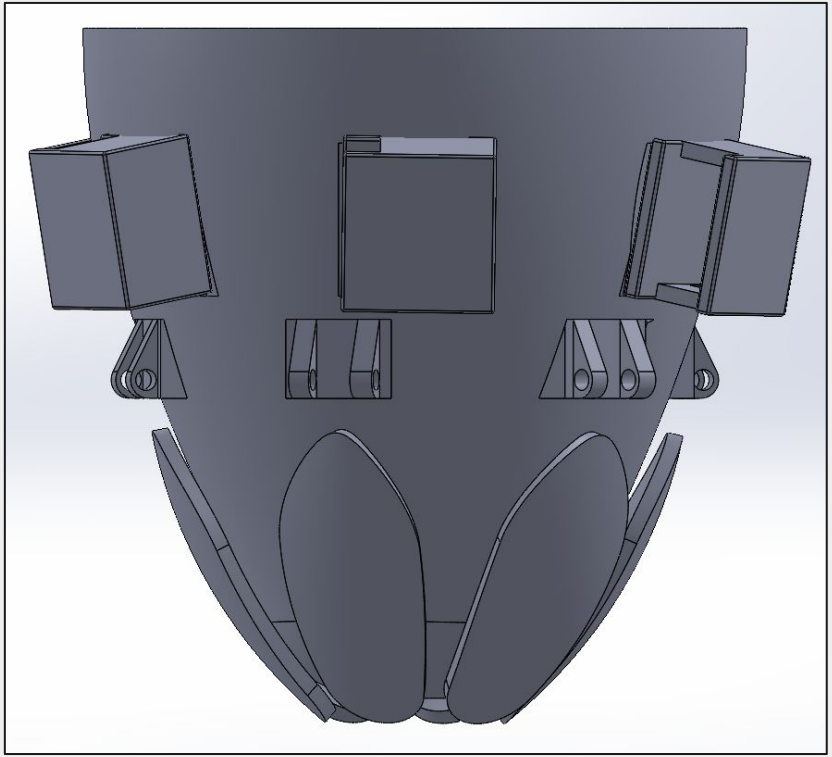

Figure 1: Full Assembly

Cad with the whole system - include human, prosthetic limb, and socket

- Also add this image to the expo poster

MECHANICAL REQUIREMENTS

Requirement	Verification Method	Category (ID)	Status
Socket shall include a socket core consisting of TPU and will have 3 mm wall thickness.	Caliper measurement	Mechanical	Verified in SolidWorks & Through Caliper Measurement
System shall include six rigid petals attached to the TPU socket via hinge system.	Visual inspection	Mechanical	Verified in SolidWorks Assembly
Socket shall be designed for a pediatric transradial shin (below-the-knee) with an internal diameter of 100mm at the proximal opening.	Measure internal circumference with a flexible tape.	Mechanical	Verified in SolidWorks
Socket internal length (from proximal opening to distal end) shall be 160/pm 10 mm.	Measure internal length with calipers or depth gauge.	Mechanical	Verified in SolidWorks
Socket internal length (from proximal opening to distal end) shall be 160/pm 10 mm.	Measure wall thickness at multiple locations with calipers.	Mechanical	Verified in SolidWorks

Table 2: Mechanical Requirements

MECHANICAL REQUIREMENTS

Requirement	Verification Method	Category (ID)	Status
Socket mass shall be ≤ 300 g.	Weigh on lab scale.	Mechanical	Verified
Socket shall withstand a static load of 100 N without visible damage.	Apply load on test rig, inspect for damage.	Mechanical	Verified in SolidWorks
Hinge shall allow controlled flexion without coming off socket.	Cyclic flexion test	Mechanical	In Progress
Hinge shall maintain alignment under load.	Loaded actuation test	Mechanical	In Progress
System shall withstand 100 N radial load without failure.	Load test	Mechanical	Verified in SolidWorks
Servo torque shall exceed required 0.5 Nm actuation torque.	Torque validation test	Mechanical	In Progress
If a mechanical adjustment mechanism is used, it shall produce ≥ 1 mm change in local socket clearance.	Measure displacement with calipers during actuation.	Mechanical	In Progress

Table 3: Mechanical Requirements

SENSOR & ELECTRICAL REQUIREMENTS

Requirement	Verification Method	Category (ID)	Status
Socket shall integrate six FSRs at distinct interface locations.	Visual inspection and wiring continuity check.	Bioinstrumentation	In Progress
FSRs shall measure 0–100 N with resolution ≤ 1 kPa.	Verify via FSR Documentation	Bioinstrumentation	Verified
Microcontroller shall sample all sensors at ≥ 80 Hz.	Timestamp logging	Embedded	In Progress
Servo actuation latency shall be < 1 s.	Step-response test	Performance	In Progress
Power system shall supply 6V servo rail + 5V logic rail.	Multimeter measurement	Electrical	In Progress
Total system power ≤ 36 W peak.	Current draw measurement	Electrical	In Progress

Table 4: Mechanical Requirements

CONTROL & SAFETY REQUIREMENTS

Requirement	Verification Method	Category (ID)	Status
All user-contacting surfaces shall be free of sharp edges and burrs.	Visual and tactile inspection.	Safety	Verified & Ensured throughout CAD Process
All electrical components shall be enclosed or strain-relieved to prevent exposed wiring during normal use.	Visual inspection and gentle handling test.	Safety	In Progress
Threshold detection shall correctly identify pressure spikes	Bench testing	Software	In Progress
A smoothing filter shall reduce noise without oscillation.	Logged data analysis	Software	In Progress
Proportional mapping shall convert force → servo angle.	Firmware test	Software	In Progress

Table 5: Mechanical Requirements

01

MECHANICAL DESIGN

DESIGN UPDATE

Figure 3: Original Design

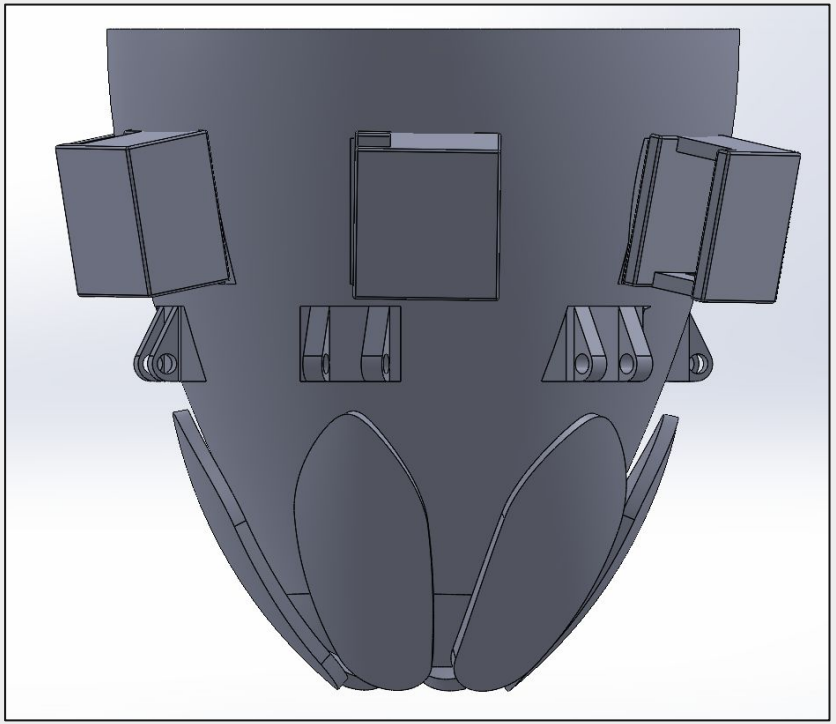

Figure 4: Updated Design

UPDATED HINGE SYSTEM

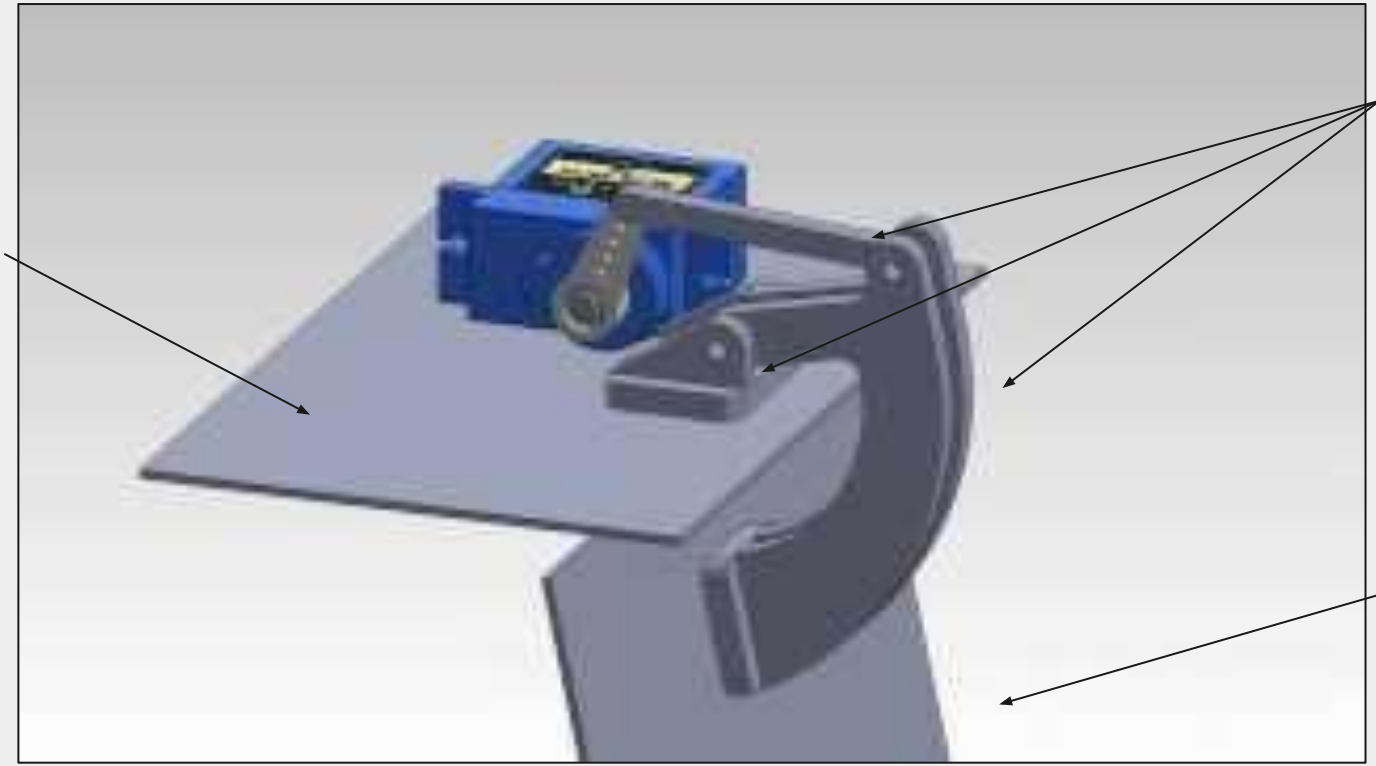

[2]

Figure 5: Hinge Mechanism Demonstration

SERVO MOTOR HOUSING METHOD UPDATE

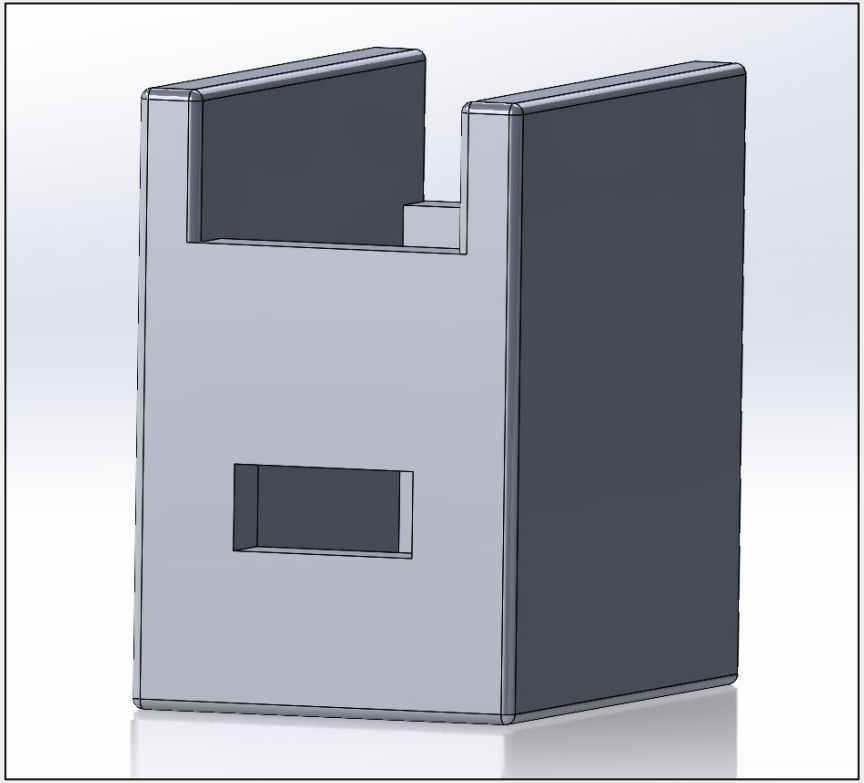

Figure 6: Servo Motor Pocket

SERVO MOTOR HOUSING METHOD UPDATE

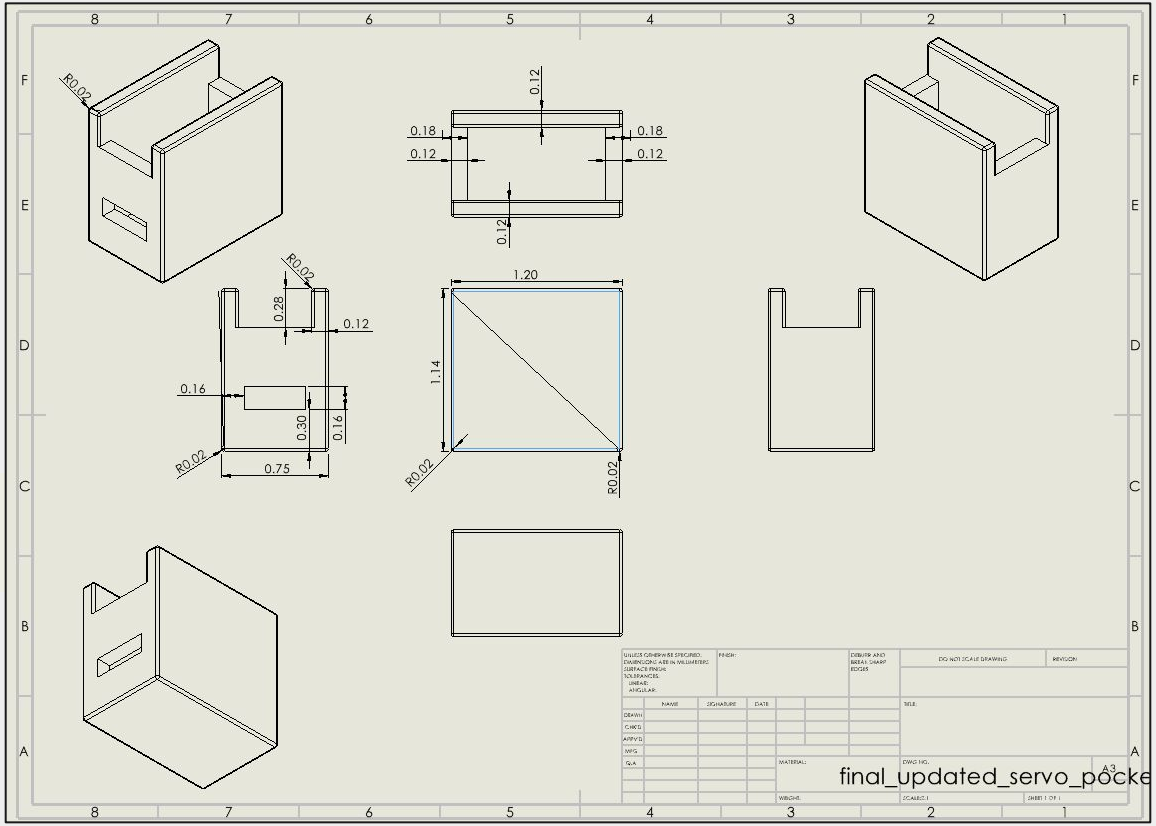

Figure 7: Servo Pocket Drawing & Dimensions

SERVO MOTOR HOUSING UPDATE

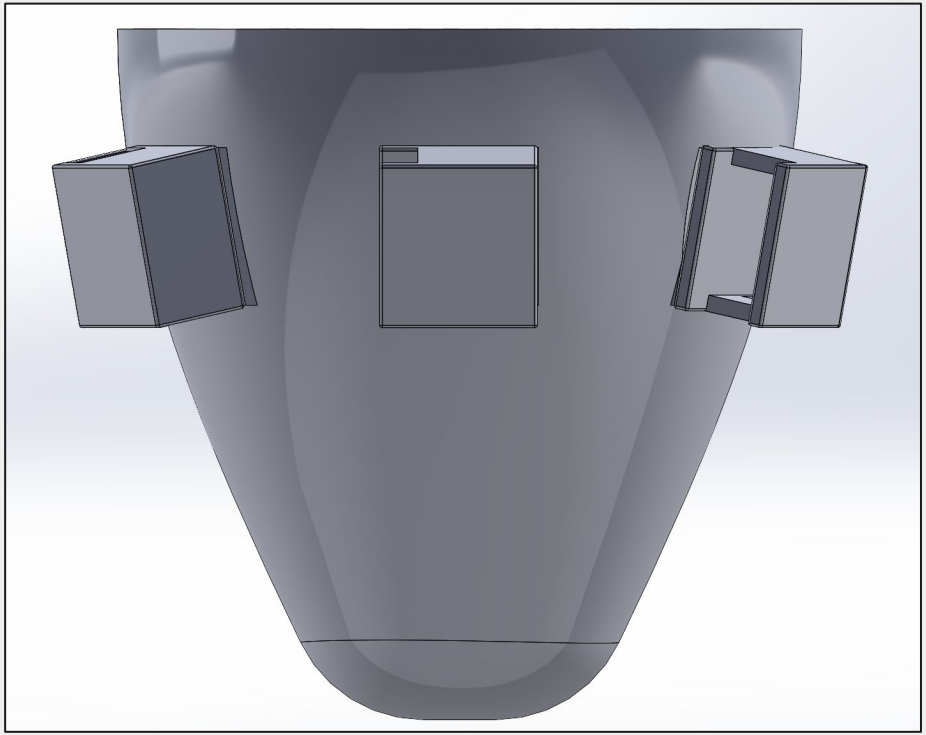

Figure 8: Socket with Servo Pockets Attached

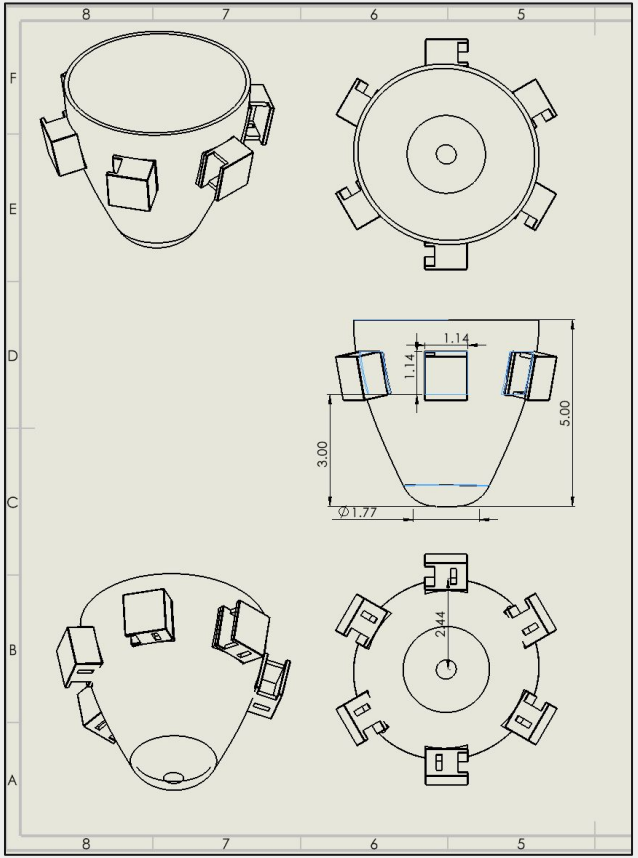

Figure 9: Socket with Servo Pockets Drawing

SOCKET WITH SERVO HOUSING & HINGES

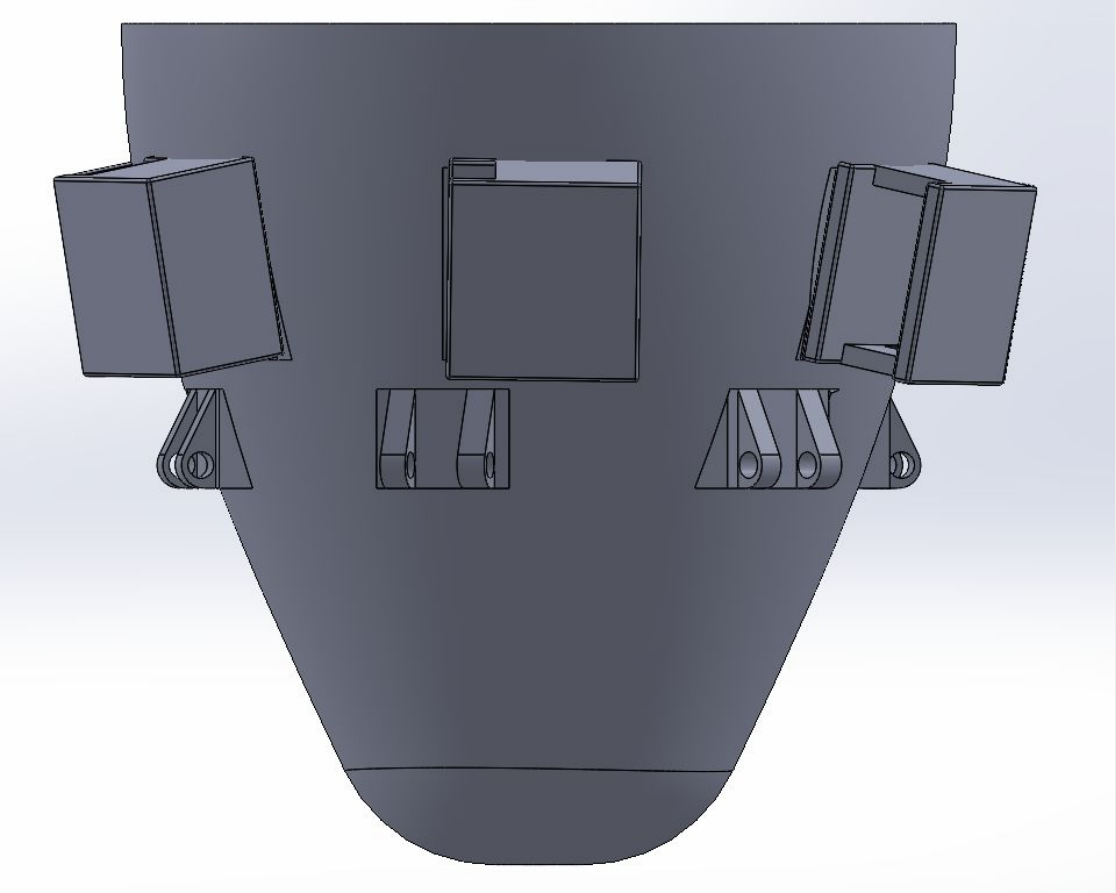

Figure 10: Socket with Servo Pockets & Hinges Attached

DIMENSIONED PETAL DRAWING

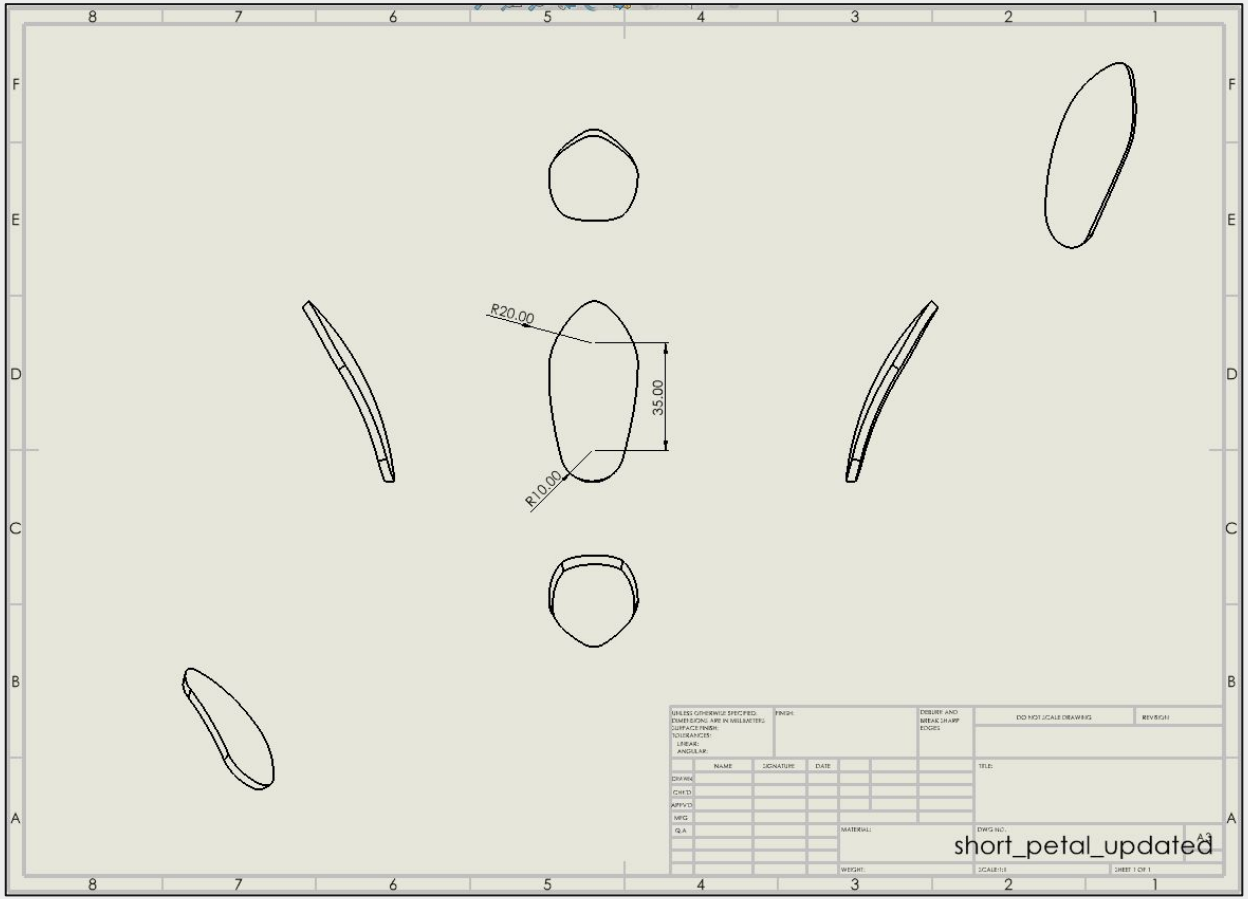

Figure 11: Engineering Drawing Updated Petal Dimensions

FULL MECHANICAL ASSEMBLY

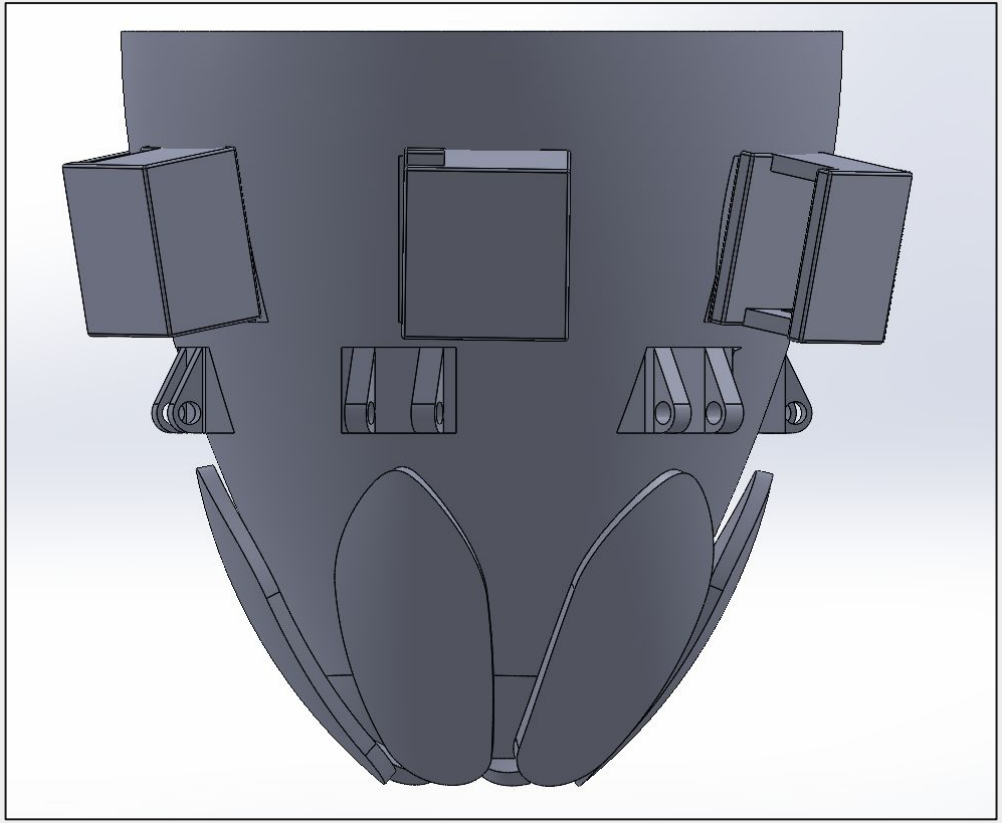

Figure 1: Full Assembly

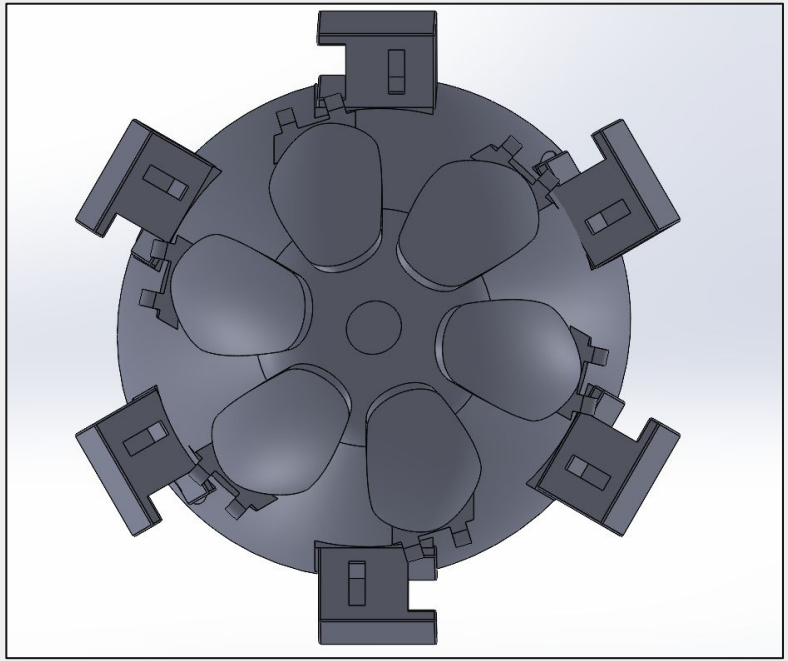

Figure 12: Bottom View Full Assembly

SOCKET STRESS VALIDATION

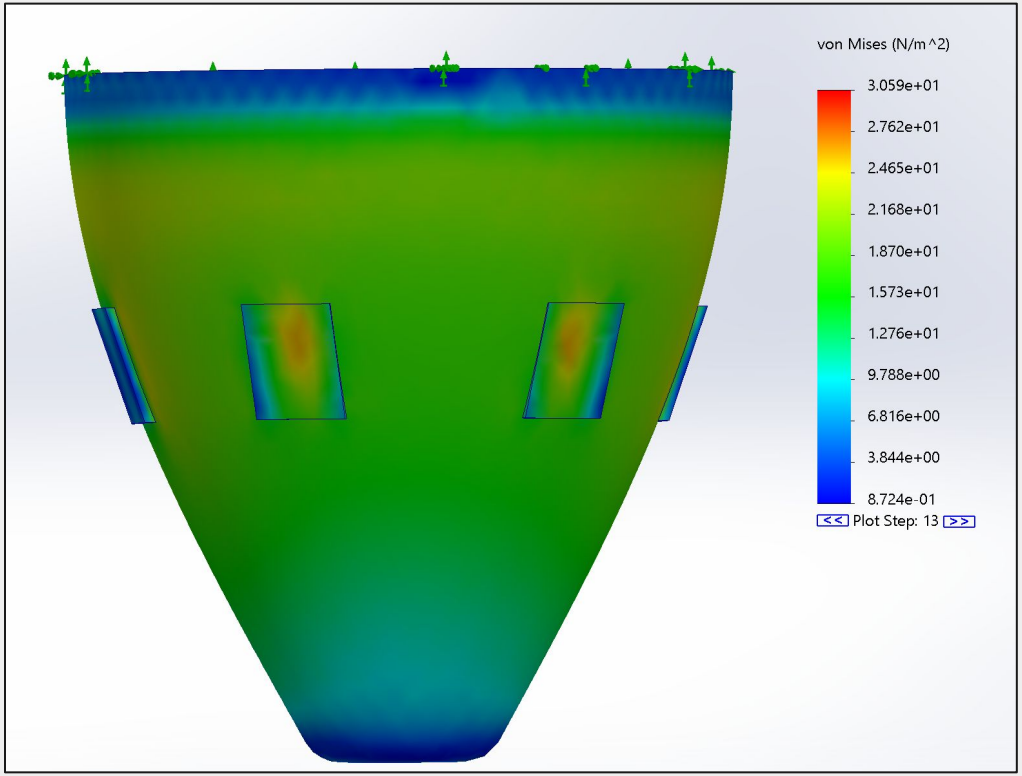

Figure 13: FEA Model of TPU Socket

- **Structural Safety:** FEA confirms peak stress 30.6 Pa remains far below the TPU Yield Strength 12.5 MPa, ensuring zero risk of material failure or tearing under 100N loads.
- **Growth Accommodation:** Nonlinear Large Displacement analysis validates that the "pockets" deform sufficiently to adjust internal volume, mathematically proving the device grows with the patient.
- **Weight Target:** Mass-property analysis verifies a total assembly weight of 285g, meeting the pediatric clinical requirement of < 300g for improved mobility.
- **High-Fidelity Modeling:** Implementation of the Mooney-Rivlin Hyperelastic Model validates the digital twin’s accuracy in predicting real-world "squish" and pressure distribution.

MECHANICAL SYSTEM OVERVIEW

1. TPU Socket Core
2. Rigid petals
3. Integrated Servo Housings & Kinematic Linkage
4. Servo array and linkage arms
5. FSRs

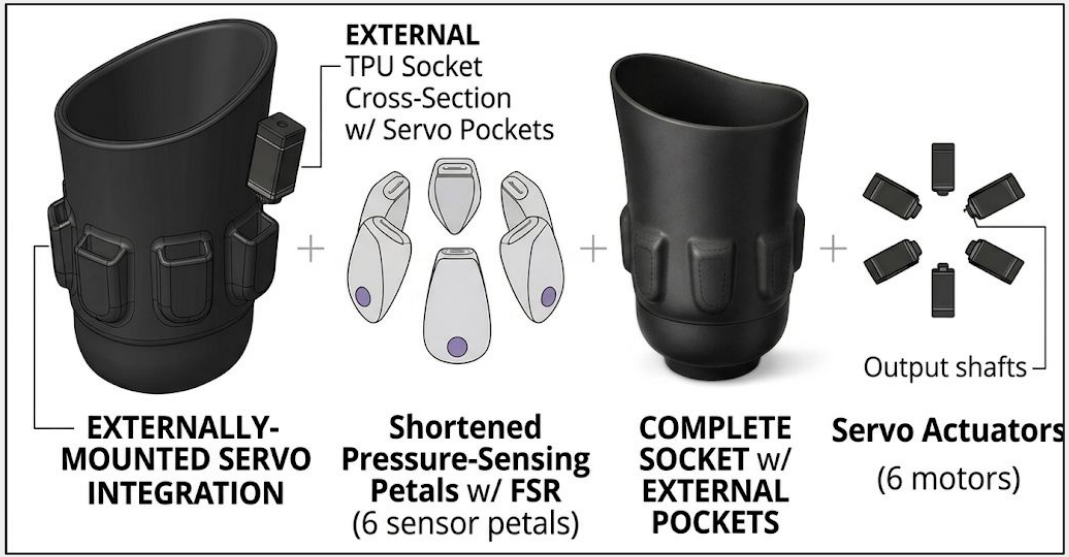

Figure 14: Individual Components

Mechanical structure enabling adaptive actuation

PETAL MECHANISM DESIGN

Material: PLA

Chosen for its structural rigidity, dimensional stability, and efficient transmission of servo torque.

Key Properties:

- **Young's modulus:** ~2,500 – 3,500 MPa
- **Tensile strength:** ~40 – 60 MPa
- **Elongation at break:** < 10%
- **Tear resistance:** High
- **Fatigue behavior:** Fair

Why it matters:

- **Rigid, Efficient Motion:** Replaces gentle, compliant motion with direct, high-efficiency mechanical actuation, maximizing torque transmission.
- **Modelable System:** The lack of material deformation provides predictable, linear behavior that is much simpler to model in a system dynamics simulation than an elastomeric system.
- **Mechanical Security:** PLA's rigid surface provides a superior, vibration-resistant mount for sensors and high-load servo hardware.

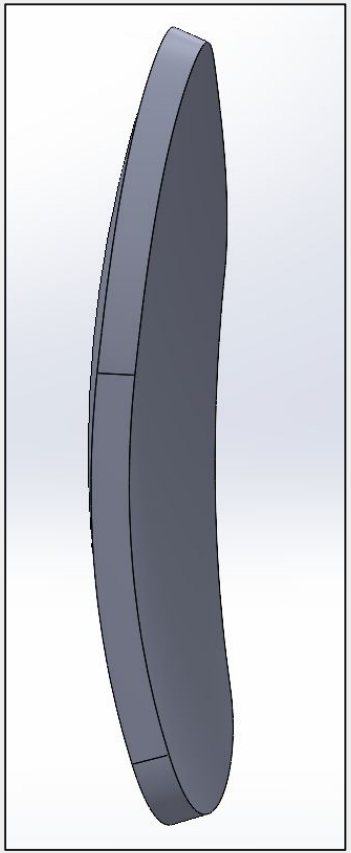

Figure 15: Updated Petal Geometry

MANUFACTURING TABLE

Component	Material	Manufacturing Method	Status
Socket Core	TPU	3D print	CAD complete + Printed Test Runs in PLA
Petals	PLA	3D print	CAD complete + Printed
Hinge	PLA	3D print	CAD complete + Printed
Servo Pockets	TPU	3D print	CAD complete + Printed

Table 6: Manufacturing Table

INTERACTION MATRIX

Criteria	Safety	Ease of Use	Comfort	Cost of production	Appearance	Row Total	Normalized value
Safety	-	3	3	2	1	9	9/40 = 0.225
Ease of Use	3	-	3	2	1	9	0.225
Comfort	3	3	-	2	1	9	0.225
Cost of Production	2	2	2	-	2	8	0.200
Appearance	1	1	1	2	-	5	0.125
Column Total						40	

Table 7: Interaction Matrix

0 = no interaction ; 1 = weak interaction ; 2 = medium interaction ; 3 = strong interaction

DECISION MATRIX

Criteria	Normalized Value	Design #1		Design #2	
Safety	0.225	4	0.9	3	0.675
Ease of Use	0.225	5	1.125	5	1.125
Comfort	0.225	3	0.675	1	0.225
Cost of Production	0.200	4	0.8	5	0.8
Appearance	0.125	5	0.625	5	0.625
Totals		–	4.125	–	3.45

Table 8: Decision Matrix

0 = criteria not met; 5 = criteria met perfectly

CURRENT PROGRESS

- **Geometry Finalized:** Completed dimensioning for socket core, added hinges, and reduced-scale petals.
- **Kinematic Optimization:** Inverted petals to downward-facing orientation at mid-socket height for superior torque.
- **Actuation Integration:** Replaced bulky support ring with integrated external servo pockets at a uniform axial height.
- **Validation:** Successfully 3D printed and fit-tested the socket, shortened petals, and mounting housings.
- **Documentation:** Updated BOM, Gantt chart, and manufacturing tables to reflect current architecture.

NEXT STEPS

1. **Assembly:** Complete 3D printing and assembly of the full mechanical prototype.
2. **Electronics:** Print the physical PCB mount
3. **Kinematic Testing:** Validate full actuation range and check for binding in the integrated servo pockets.
4. **Mechanical Subsystem Verification:**
    a. **Radial Load:** Execute 100 N stress testing for structural integrity.
    b. **Performance:** Verify downward petal actuation smoothness and force output.

02

ELECTRICAL DESIGN

ELECTRICAL SYSTEM OVERVIEW

1. **FSR Array (x6)**
   Measures localized pressure on each petal

1. **Voltage Divider Network**
   Converts FSR resistance changes into readable voltages

1. **Microcontroller (Arduino)**
   Performs ADC sampling, filtering, thresholding, and control logic

1. **Servo Drivers + PWM Control**
   Generates actuation signals for 6 micro-servos

1. **Power Distribution System**
   2x Lithium Ion → 8V Regulator → servo rail + 5V logic rail

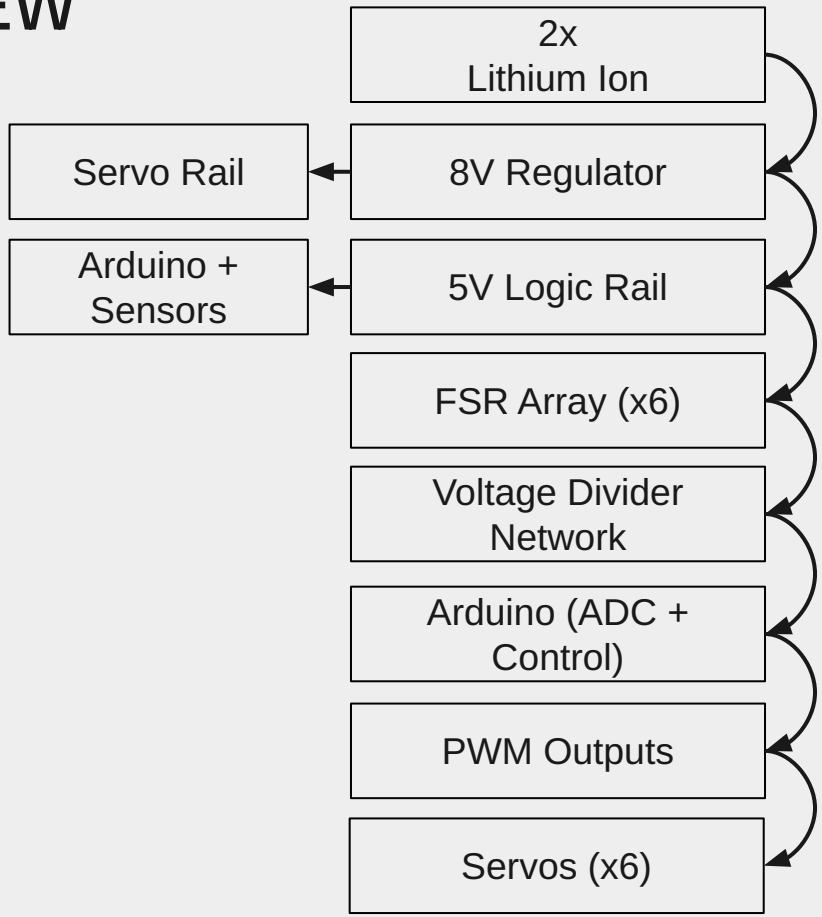

Figure 8: Electrical System Flowchart

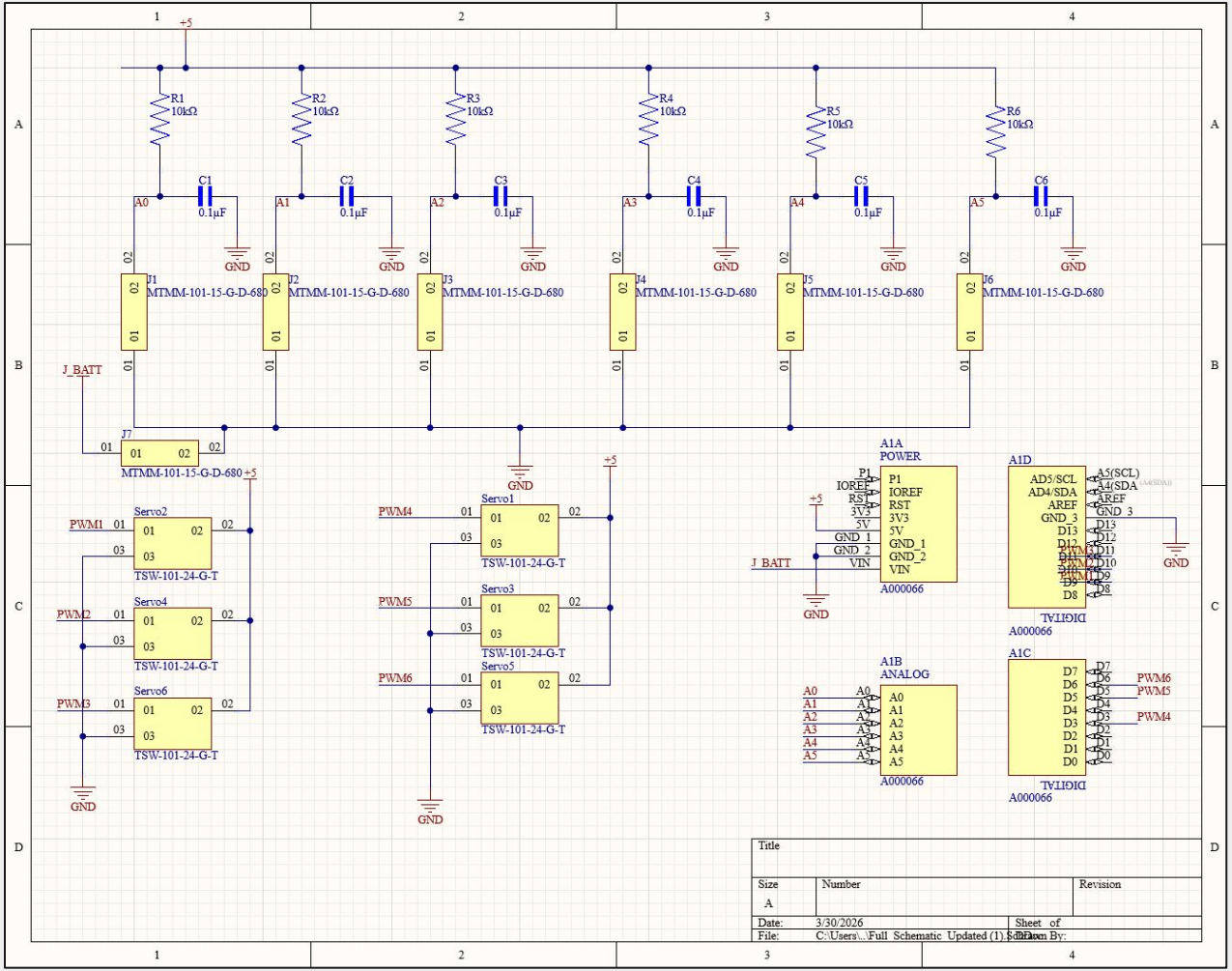

ALTIUM SCHEMATIC

Figure 16: PCB Layout Schematic

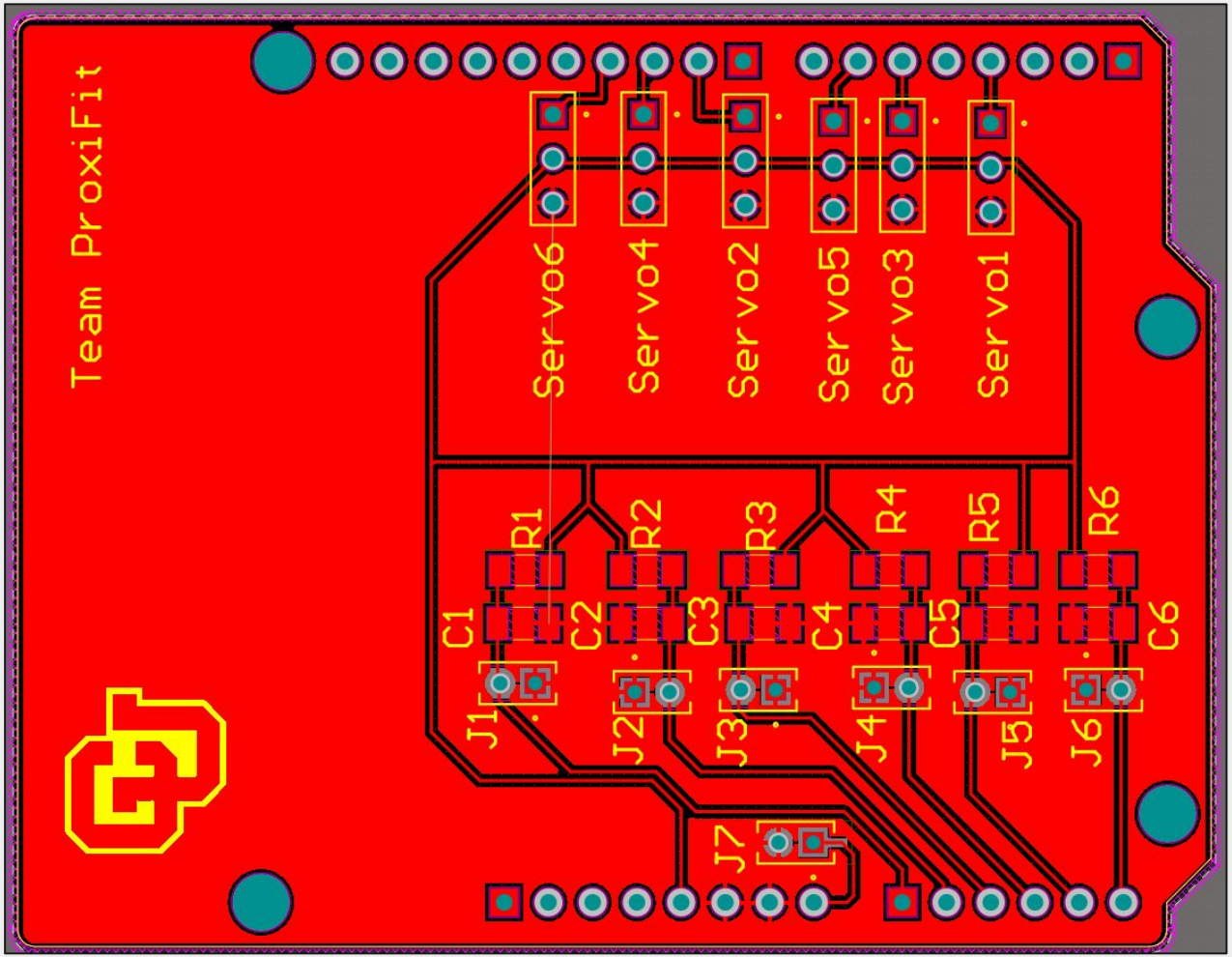

ALTIUM PCB SCHEMATIC

Figure 17: PCB Altium Schematic

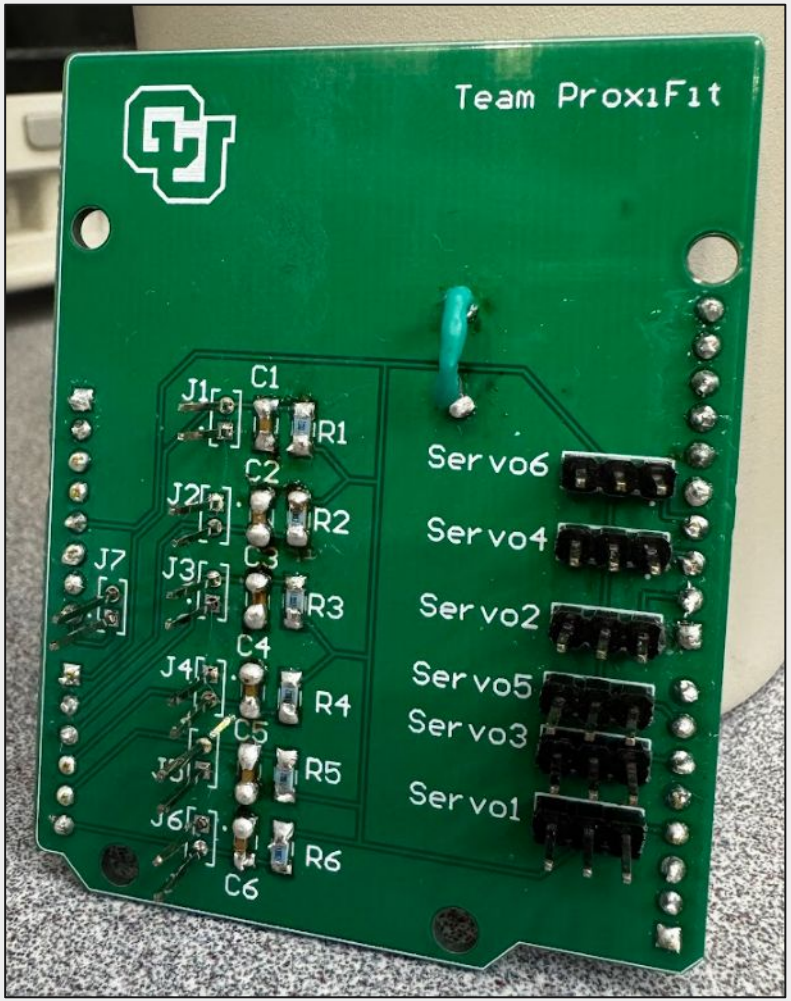

PCB COMPONENTS SOLDERED & VERIFIED

Figure 18: Soldered PCB

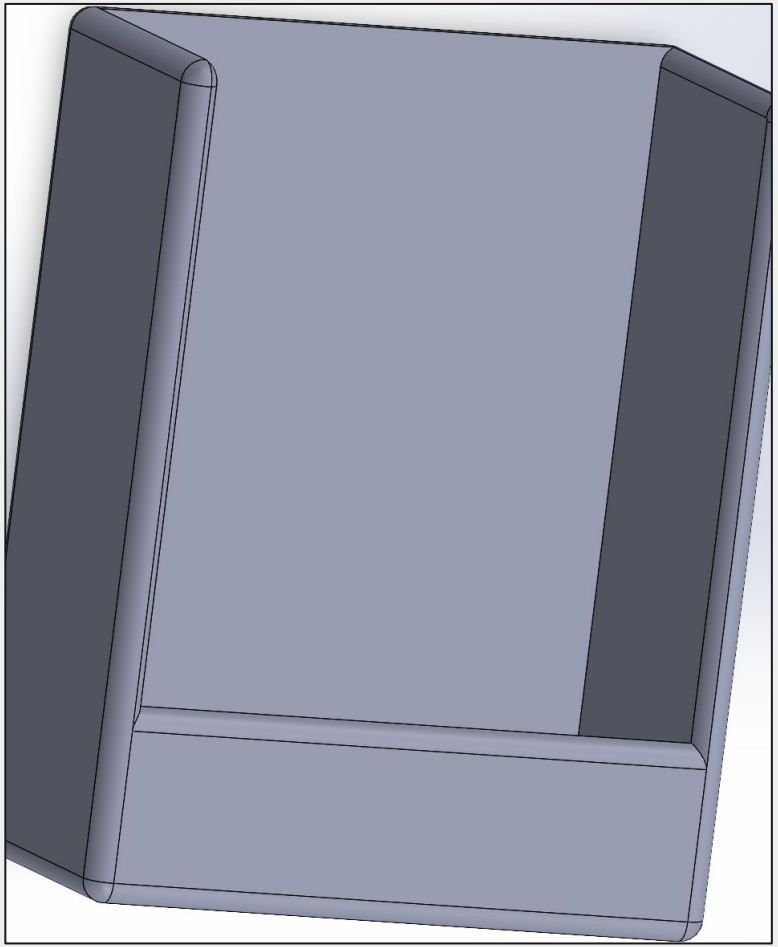

PCB + ARDUINO + BATTERY PACK MOUNT

Figure 19: Mount for Arduino Uno, PCB Shield, and Battery Pack

FULL SYSTEM ARDUINO CONTROL LOGIC

```
#include <Servo.h>

Servo myServo;

// Pin definitions
const int fsrPin = A0;   // FSR connected to analog pin A0
const int servoPin = 11;  // Servo signal connected to digital pin 6

// Variables
int fsrValue = 0;
int angle = 90;

// Tuning values (adjust these after testing)
const int minFSR = 50;    // FSR reading with little/no pressure
const int maxFSR = 600;   // FSR reading with strong pressure

const int minAngle = 15;  // Middle position
const int maxAngle = 30; // Upper position

void setup() {
  Serial.begin(9600);
  myServo.attach(servoPin);
  myServo.write(minAngle);   // Start at middle position
}
```

```
void loop() {
  // Read pressure from FSR
  fsrValue = analogRead(fsrPin);

  // Convert pressure into servo angle
  angle = map(fsrValue, minFSR, maxFSR, minAngle, maxAngle);

  // Keep angle within safe range
  angle = constrain(angle, minAngle, maxAngle);

  // Move servo
  myServo.write(angle);

  // Print values for testing
  Serial.print("FSR: ");
  Serial.print(fsrValue);
  Serial.print("   Angle: ");
  Serial.println(angle);

  delay(50);
}
```

Figure 20: Complete Six Sensor System Arduino Code

Add Example signal we acquire from code

ARDUINO CODE LOGIC FLOWCHART

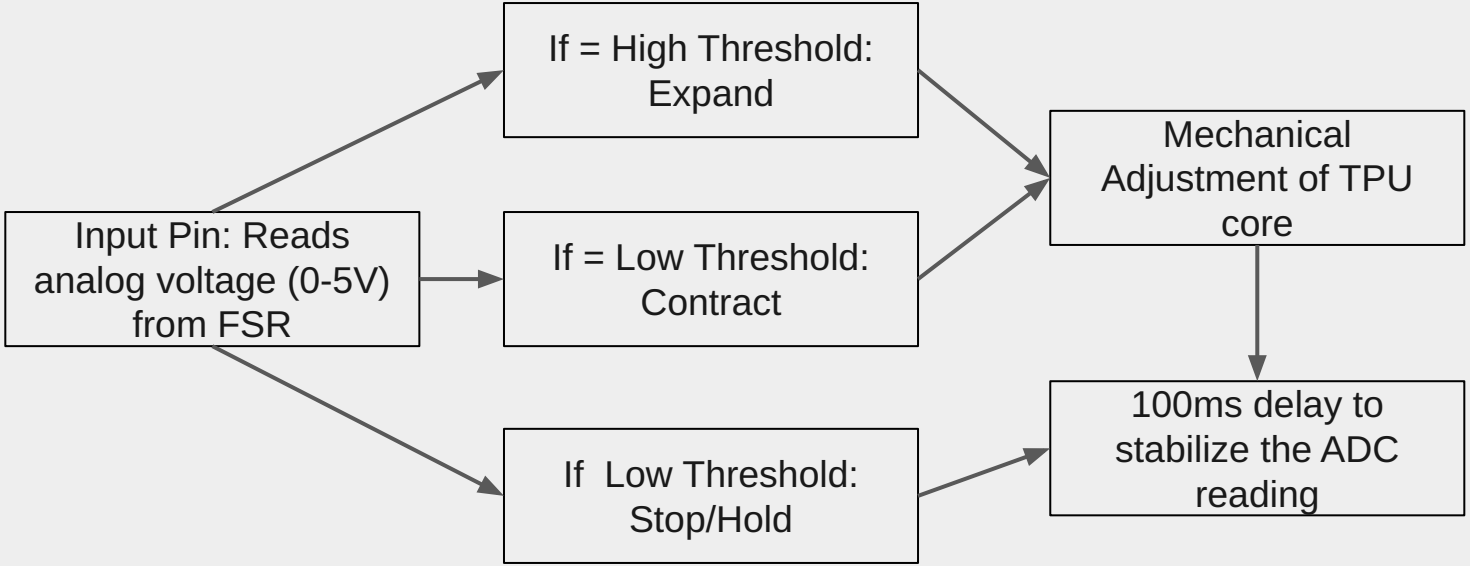

Figure 21: Preliminary Arduino Code Logic Flowchart

FORCE-TO-MOTION CONTROL LOGIC

1. Threshold Detection:
   a. Prevents unnecessary actuation
   b. If F < F_threshold → No motion
2. Proportional Mapping:

$$\theta = k(F - F_{threshold})$$

   a. Theta = servo angle
   b. K = gain constant
   c. F = measured force
1. Smoothing Filter:
   b. Moving average filter
   c. Reduce tensor noise
   d. Prevents oscillation

Force Applied to Petal
↓
FSR Resistance Change
↓
Voltage Divider Output
↓
Arduino ADC (0–1023)
↓
Threshold + Mapping Function
↓
PWM Signal Output
↓
Servo Rotation (Petal Adjustment)

Figure 22: Electrical Flowchart

CURRENT PROGRESS

- **PCB Assembly:** Completed high-fidelity soldering of all custom PCB components; verified individual circuit functionality via incremental testing.
- **Component Procurement:** Received FSRs; initiated sensor integration and interface testing.
- **Architecture & Power:** Sensing-to-actuation control logic in progress.
- **Hardware Integration:** Printing the mount for the PCB, Arduino, and battery battery pack to go on the outside of the socket.
- **Validation:** Approval secured from Lauren prior to final PCB submission and assembly.

NEXT STEPS

- **Hardware Housing:** Attach printed mounting for the PCB, Arduino, and battery to socket.
- **Sensor Integration:** Install the 6-FSR array and verify signal quality under active compression.
- **Characterization:** Validate ADC readings and map sensor response curves for precise pressure monitoring.
- **Signal Processing:** Implement smoothing filters and threshold-based control logic on the MCU.
- **Actuation Loop:** Prototype a single-servo control loop before expanding to the full 6-channel wiring harness.

SYSTEM INTEGRATION INTERFACES + RISKS

Mechanical + Electrical

- FSR mounting and compression consistency
- Servo linkage alignment
- Cable routing through petals + strain relief

Risk: Sensor noise or unstable readings on long wires
Mitigation: PCB-mounted dividers, twisted-pair routing, smoothing filter

Risk: Wiring interfering with petal motion
Mitigation: Guided channels + strain relief in mechanical design

Electrical + Control (Arduino + PCB)

- Voltage dividers → ADC pins
- PWM outputs → servo connectors
- 6 V servo rail + 5 V logic rail distribution
- PCB as central hub for clean wiring + reduced noise

Risk: PCB layout errors delaying testing
Mitigation: PCB Validation at the ITLL before manufacturing

Control + Mechanical

- Servo angle limits
- Actuation speed
- Safety constraints to prevent runaway motion

PROJECT RISKS & MITIGATIONS

Mechanical Performance Risks

Risk: Petal alignment causes binding or asymmetric motion
Mitigation: Tolerance checks; iterative prototype refinement; guided servo linkage paths.
Risk: Socket deformation and repeated wear
Mitigation: Careful material selection; have multiple iterations of the TPU socket printed and ready at-hand.

Electrical & Control Risks

Risk: Sensor noise leads to unstable or jittery actuation
Mitigation: PCB-mounted voltage dividers; smoothing filters; gain tuning.
Risk: Servo current spikes cause brownout or resets
Mitigation: Separate 6V servo rail + 5V logic rail; bulk capacitors; staged actuation.
Risk: Control loop latency too slow for real-time adjustment
Mitigation: Optimize sampling rate; reduce unnecessary computations; profile loop timing early.

Integration & Schedule Risks

Risk: Mechanical-electrical integration takes longer than expected
Mitigation: Integrate one sensor/servo pair early; parallelize mech + elec work; maintain weekly integration checkpoints.
Risk: PCB fabrication delays testing
Mitigation: Begin with structured breadboard; order PCB only after validated prototype.

Mitigations focus on early testing, parallel development, and reducing integration uncertainty before Final Expo on April 18th.

PROJECT TIMELINE

Finalize Design

Feb 16 - Feb 28

- Finalize CAD geometry
- Order components

System Development

March 3 - March 21

- Mechanical manufacturing
- Integration of pressure sensors
- PCB Manufacturing
- CDR review

Integration

March 24 - April 4

- Functional electrical components
- Preliminary poster
- Finalize mechanical model

Validation

April 7 - April 18

- Finalized functioning model
- Prepare for expo

03

THEORY & CALCULATIONS

INTERFACE PRESSURE ANALYSIS

$$P = F / A$$

P = pressure (Pa)
F = applied force (N)
A = contact area (m^2)

Maximum force: 100 N
Estimated contact area: 15-20 cm^2 = 0.0015-0.0020 m^2

P = 100/0.0015 = 66.7 kPa
P = 100/0.0020 = 50 kPa

Conclusion:

- TPU interface reduces peak interface pressure by **25–40%** compared to traditional silicone by utilizing a lower durometer and custom-contoured geometry to maximize the effective load-bearing area → **directly addresses the specific discomfort issues**
- Load is distributed through the compressible fiber structure
- Lower risk of localized pressure points

SOCKET WALL STRESS ANALYSIS

Stress = F / A

Assumptions:
F = 100 N radial load
t = 3 mm wall thickness
C ≈ 140 mm socket circumference
A = t x C = 420 mm^2 = 4.2 x 10^{-4} m^2

Stress = (100 N) / (4.2 x 10^{-4} m^2)
Stress = 0.24 MPa

Material Comparison:
TPU yield ≈ ~7-10 MPa
→ Safety Factor ≈ 30-40

Conclusion:
- 3 mm TPU wall is more than sufficient for 100 N radial compression
- TPU's ductility provides additional energy absorption
- Local features (holes, thin ribs) should still be checked individually

SERVO TORQUE REQUIREMENT

Given:

F (required petal force) = 20 N

R (lever arm) = 25 mm = 0.025 m

Torque:

$$T = F * r$$

T = 20 * 0.025

T = 0.5 Nm

Typical micro servo torque:
0.6 - 1.2 Nm

Conclusion: Micro servo meets torque requirement with margin

CONTROL ELECTRONICS + SENSORS POWER

Given:
Microcontroller: V = 5 V, I = 50 mA
FSR readout + small circuitry: I = 20 mA

Power:
P_{MCU} = (5V) * (0.05A) = 0.25 W
P_{sense} = (5V) * (0.02A) = 0.10 W

Total low-power electronics:
$P_{electronics}$ = 0.35 W

Given:
Servo supply voltage: V_S = 6 V
Max current (under load): I_S = 1 A

Electrical power per servo:
$P_{servo} = V_S * I_S$ = (6 V) * (1 A) = 6 W

For 6 petals (6 servos):
$P_{total,\ servos}$ = 6 * 6 W = 36 W (all loaded)

$$\mathbf{P_{total} = P_{servos} + P_{electronics}}$$

$$\mathbf{P_{total} = (36W) + (0.35W) \approx 36.35\ W\ (worst\ case,\ all\ loaded)}$$

BATTERY LIFE ESTIMATE

Given (example):

Battery: $V_b = 7.4$ V, 2100 mAh = 2.1 Ah

Average power draw: $P_{avg} = 12$ W

Current draw:

$I_{avg} = (P_{avg})/(V_b) = (12W)/(7.4V) = 1.62$ A

Battery life:

T = (2.1Ah)/(1.62A) = 1.3 hours

04

FEASIBILITY & NEXT STEPS

WHY THIS DESIGN IS FEASIBLE

Mechanical Feasibility

- Safety factor from stress analysis = 30-40 (TPU)
- Servos exceed required torque

Electrical Feasibility

- Peak load: 36.33 W
- Supply sized with current margin
- Control electronics < 1% total load

Control Feasibility

- Direct analog sensing via FSRs
- Linear voltage divider architecture
- Proven PWM servo control

Project Feasibility

- CAD complete
- Integration sequence in progress
- Risks identified with mitigation plan

BILL OF MATERIALS

Item	Qty.	Source	Subtotal ($)	Status
FSRs	6	Digikey	45.00	Received
Arduino	1	Already Own	0	Received
Custom PCB	1	JLCPCB	0	Received
Resistors	6 (10kΩ)	Already Own	0	Received
TPU	1	University ITLL	10	
Capacitors (1x10μF, 2x0.1μF)	3 total	Already Own	0	Received
Servo Motors (1 per petal)	6	Terry in the E-Store	0	Received
Header Pins (0.1” male)	~20	Already Own	0	Received

Item	Qty.	Source	Subtotal ($)	Status
TPU Filament (x1 roll)	$25/roll	University ITLL	25.00	
M3 Mounting screws	6	University ITLL	0	
Hex nuts (3 mm screw diameter)	6	University ITLL	0	
Washers (3 mm screw diameter)	6	Hardware Store	1.00	
Cyanoacrylate Adhesive	1	University ITLL	0	
Lithium Ion	2	Already Own	0	Received
Poster	1	University ITLL	0	
Total Cost of Project			**$71.00**	

Table 9: Updated Bill of Materials

POWER BUDGET

Component	Voltage	Peak Current	Total Peak Power
Arduino	5V	50 mA	0.25W
FSRs (x6)	5V	5 mA	0.075W
Micro-servos (x6)	6V	1.0 A	36.0 W
Total (Peak)			36.325W

Table 10: Power Budget Breakdown

Peak power consumption is **36.33 W**, driven primarily by simultaneous servo actuation (6A at 6V). A supply rated above this peak current will be selected to provide margin and prevent voltage sag, ensuring stable operation under worst-case loading.

GANTT CHART

1	Project Initiation & Early Design					
1.1	Brainstorm initial project ideas	Team	2/2/26	2/3/26	1	100%
1.1.1	Select final project concept	Team	2/2/26	2/3/26	1	100%
1.1.2	Define problem statement	Team	2/3/26	2/3/26	0	100%
1.1.3	Define user needs	Team	2/3/26	2/3/26	0	100%
1.1.4	Draft initial requirements	Team	2/3/26	2/3/26	0	100%
1.1.5	Draft constraints list	Team	2/3/26	2/3/26	0	100%
1.1.6	Draft success criteria	Team	2/3/26	2/3/26	0	100%
1.1.7	Create initial BOM draft	Team	2/3/26	2/3/26	0	100%
1.1.8	Draft constraints list	Team	2/5/26	2/7/26	2	100%
1.2	Research pressure sensors	Madison	2/5/26	2/7/26	2	100%
1.2.1	Research pediatric socket designs	Madison	2/5/26	2/7/26	2	100%
1.2.2	Research soft-robotic petal mechanisms	Merci	2/5/26	2/7/26	2	100%
1.2.3	Research hinge band materials	Merci	2/5/26	2/7/26	2	100%
1.2.4	Research silicone core options	Madison	2/5/26	2/7/26	2	100%
1.2.5	Research 3D printing materials	Jordan	2/5/26	2/7/26	2	100%
1.3	Identify ITLL Printers	Jordan	2/6/26	2/7/26	1	100%
1.3.1	Identify potenital vendors	Merci	2/6/26	2/7/26	1	100%
1.3.2	Estimate material costs	Merci	2/6/26	2/7/26	1	100%
1.4	Draft project timeline	Jordan, Madison	2/6/26	2/7/26	1	100%
1.4.1	Draft risk assessment	Team	2/6/26	2/7/26	1	100%
1.4.2	Draft mitigation strategies	Team	2/6/26	2/7/26	1	100%
1.4.3	Draft verification plan outline	Team	2/6/26	2/7/26	1	100%
1.4.4	Draft system architecture outline	Team	2/6/26	2/7/26	1	100%
1.4.5	Draft block diagram outline	Team	2/6/26	2/7/26	1	100%
1.4.6	Draft software flowchart outline	Team	2/6/26	2/7/26	1	100%
1.4.7	Edit Project Proposal	Team	2/2/26	2/7/26	5	100%
1.4.8	Submit proposal	Team	2/8/26	2/9/26	1	100%

1.5	Create initial socket sketch	Madison	2/9/26	2/11/26	2	100%
1.5.1	Create initial petal sketch	Merci	2/9/26	2/11/26	2	100%
1.5.2	Create hinge band sketch	Merci	2/9/26	2/11/26	2	100%
1.5.3	Create silicone core sketch	Jordan	2/9/26	2/11/26	2	100%
1.5.4	Create mid-height hind band sketch	Team	2/9/26	2/11/26	2	100%
1.5.5	Create assembly sketch	Team	2/9/26	2/11/26	2	100%
1.5.6	Begin CAD model	Madison, Merci	2/10/26	2/11/26	1	100%
1.5.7	Model petal geometry	Merci	2/11/26	2/13/26	2	100%
1.5.8	Model mid-height hinge band	Merci	2/11/26	2/13/26	2	100%
1.5.9	Pick fabric material for socket corer	Madison	2/11/26	2/13/26	2	100%
1.5.10	Assemble components in CAD	Merci	2/11/26	2/13/26	2	100%
1.5.11	Check clearances between petals	Team	2/11/26	2/13/26	2	100%
1.5.12	Check symmetry	Team	2/16/26	2/16/26	0	100%
1.5.13	Check manufacturability	Team	2/16/26	2/16/26	0	100%
1.5.14	Export CAD images for PDR	Team	2/16/26	2/16/26	0	100%
1.6	Create PDR slides outline	Team	2/16/26	2/16/26	0	100%
1.6.1	Create updated block diagram	Team	2/16/26	2/18/26	2	100%
1.6.2	Create updated flowchart	Team	2/16/26	2/18/26	2	100%
1.6.3	Finalize CAD model	Team	2/18/26	2/18/26	0	100%

Figure 23: Project Initiation - Team Gantt Chart

GANTT CHART

2	Preliminary Design Review Prep					
2.1	Finalize BOM	Team	2/15/26	2/16/26	1	100%
2.1.1	Finalize pressure-only sensing architecture	Team	2/15/26	2/16/26	1	100%
2.1.2	Finalize block diagram for PDR	Jordan	2/16/26	2/17/26	1	100%
2.1.3	Finalize software flowchart for PDR	Jordan	2/16/26	2/17/26	1	100%
2.2	System architecture PDR slides	Jordan	2/16/26	2/17/26	1	100%
2.2.1	Mechanical deisgn PDR slides	Madison	2/16/26	2/17/26	1	100%
2.2.2	Sensing system PDR slides	Jordan	2/16/26	2/17/26	1	100%
2.2.3	Verification plan PDR slides	Madison	2/16/26	2/17/26	1	100%
2.2.4	Insert CAD images into PDR Slides	Merci	2/16/26	2/17/26	1	100%
2.2.5	Insert block diagram into PDR slides	Jordan	2/16/26	2/17/26	1	100%
2.2.6	Risk and mitigations PDR slides	Madison, Jordan	2/16/26	2/17/26	1	100%
2.3	Revise PDR slides	Team	2/18/26	2/20/26	2	100%
2.3.1	Finalize PDR slide deck	Team	2/20/26	2/20/26	0	100%
2.4	Define PCB functional requirements	Team	2/23/26	2/25/26	2	100%
2.4.1	Finalize sensor + MCU pinout	Team	2/23/26	2/25/26	2	100%
2.4.2	Create PCB block diagram	Team	2/23/26	2/25/26	2	100%
2.4.3	Begin schematic capture	Team	2/23/26	2/25/26	2	100%
2.4.4	Internal schematic review	Team	2/25/26	2/27/26	2	100%
2.4.5	PCB layout: component placement	Team	2/25/26	2/27/26	2	100%
2.4.6	PCB layout: routing	Team	2/26/26	2/27/26	1	100%
2.4.7	Run DRC + electrical check	Team	2/26/26	2/28/26	2	100%
2.4.8	Submit PCB order	Team	2/27/26	2/27/26	0	100%
2.4.9	Track PCB manufacturing status	Team	2/27/26	3/6/26	7	100%

Figure 24: Preliminary Design - Team Gantt Chart

3	Prototyping & Integration					
3.1	Order PLA for petal iterations	Team	2/23/26	3/6/26	11	100%
3.1.1	Order Nylon/Onyx or other material per conversation with Kat	Team	2/23/26	3/6/26	11	100%
3.1.2	Order pressure sensors	Team	2/23/26	3/6/26	11	100%
3.1.3	Order chosen socket material	Team	2/23/26	3/6/26	11	100%
3.1.4	Order wiring + connectors if needed	Team	2/23/26	3/6/26	11	100%
3.1.5	Order adhesive material if needed	Team	3/3/26	3/6/26	3	100%
3.2	Petal iteration #1	Madison, Merci	3/3/26	3/10/26	7	100%
3.2.1	Evaluate stiffness of iteration #1	Team	3/3/26	3/10/26	7	100%
3.2.2	Modify CAD for iteration #2	Madison, Merci	3/3/26	3/10/26	7	100%
3.2.3	Print iteration #2	Jordan	3/10/26	3/12/26	2	100%
3.2.4	Evaluate iteration #2	Madison, Merci	3/10/26	3/12/26	2	100%
3.2.5	Evaluate hinge band fit	Jordan	3/10/26	3/12/26	2	100%
3.2.6	Modify hinge band geometry	Madison, Merci	3/10/26	3/12/26	2	100%
3.2.7	Print servo pockets	Jordan	3/10/26	3/12/26	2	100%
3.3	Build Arduino test rig	Team	3/10/26	3/12/26	2	50%
3.3.1	Wire pressure sensors to Arduino	Jordan	3/9/26	3/12/26	3	100%
3.3.2	Test sensor continuity	Team	3/9/26	3/12/26	3	80%
3.4	Write ADC readout function	Team	3/9/26	3/12/26	3	100%
3.4.1	Write basic data filtering functions	Team	3/9/26	3/12/26	3	100%
3.4.2	Write threshold detection function	Team	3/9/26	3/12/26	3	100%
3.5	Add servo pockets to socket	Madison	3/9/26	3/12/26	3	100%
3.5.1	Fit socket into assembly	Team	3/13/26	3/17/26	4	90%
3.5.2	Integrate hinge + petals	Team	3/13/26	3/17/26	4	100%
3.5.3	Integrate sensores into socket test section	Team	3/13/26	3/17/26	4	90%
3.5.4	Firmware + hardware integration test	Team	3/17/26	3/17/26	0	90%

Figure 25: Prototyping & Integration - Team Gantt Chart

GANTT CHART

4	Testing & Final Deliverables					
4.1	Perform static pressure calibration	Team	3/18/26	3/20/26	2	20%
4.1.1	Perform dynamic pressure calibration	Team	3/20/26	3/23/26	3	20%
4.1.2	Record calibration curves + ADC mapping	Jordan	3/22/26	3/24/26	2	10%
4.1.3	Validate threshold detection logic	Madison	3/24/26	3/26/26	2	10%
4.1.4	Full system response time test	Team	3/30/26	4/2/26	3	20%
4.1.5	Structural integrity test	Team	3/31/26	4/3/26	3	90%
4.1.6	Shake test	Team	3/31/26	4/3/26	3	50%
4.1.7	Safety test	Team	3/31/26	4/3/26	3	20%
4.2	Begin data logging for poster	Jordan	4/1/26	4/11/26	10	50%
4.2.1	Analyze logged data + generate plots	Merci	4/2/26	4/6/26	4	20%
4.3	Draft preliminary poster	Team	4/6/26	4/10/26	4	100%
4.3.1	Create final poster graphics	Team	4/7/26	4/10/26	3	20%
4.3.2	Insert results + system photos into poster	Team	4/9/26	4/10/26	1	10%
4.3.3	Finalize poster	Team	4/10/26	4/16/26	6	0%
4.3.4	Practice EXPO presentation	Team	4/11/26	4/17/26	6	0%
4.3.5	Final Project EXPO	Team	4/18/28	4/18/26	0	0%

Figure 26: Testing and Final Deliverables - Team Gantt Chart

THANK YOU

REFERENCES

[1] “Socket Discomfort After Below-Knee Amputation,” *Limber Prosthetics*, May 15, 2025. https://limberprosthetics.com/socket-discomfort-after-below-knee-amputation/ (accessed Mar. 10, 2026).
[2] “R2-D2 - Servo Driven Hinge Design,” www.youtube.com. https://www.youtube.com/watch?v=e58yMo2MXdY